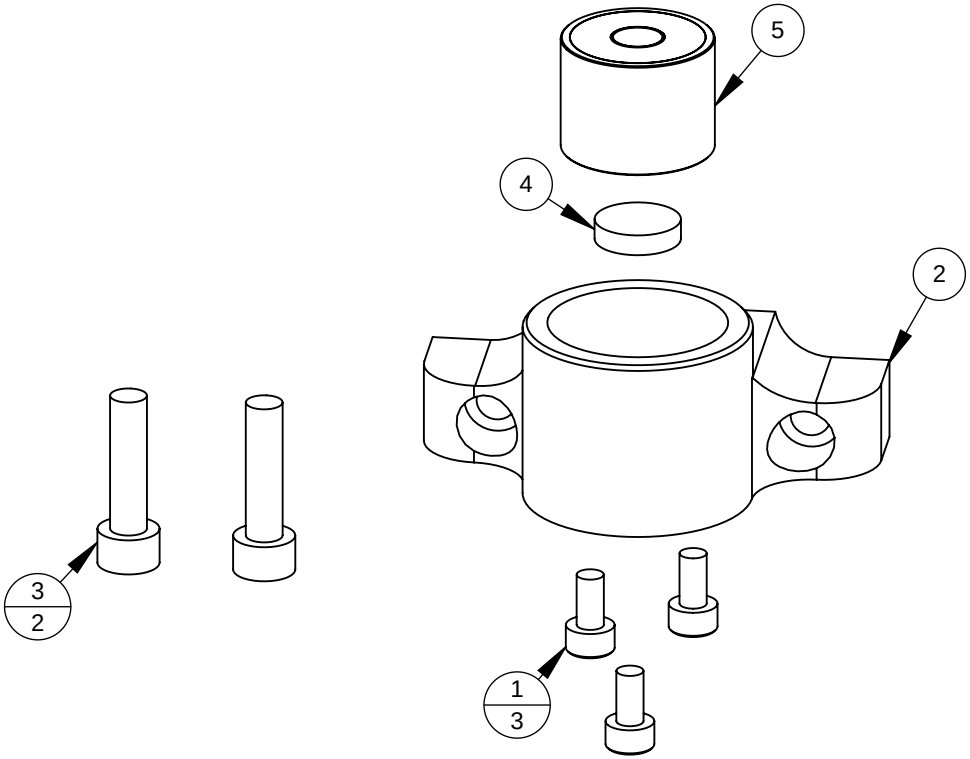

ITEM NO.	PartNo	DESCRIPTION	QTY
1	3X6MMSH	SCREW,SOCKET CAP,M3 X 6 LONG	3
2	5910-003	HOLDER,VIAL,MINI PRISM	1
3	832X5/8SC	SCREW,SOCKET CAP,8-32 X 5/8 LONG	2
4	D10507	PAD,RUBBER,ADHESIVE,3/32 X 3/8	1
5	D10508	VIAL HOUSING ASSY,SMALL,40 MIN	1

***NOTE**
Components may be sold separately.
Please see sub-assembly part number drawing for details.

5910-053 | **VIAL ASSY**

X/X ITEM#/QTY

DATE: 3/27/2008
REV. A2 PAGE 1 OF 1

MANUFACTURING CO., INC.
4155 OASIS ROAD, REDDING, CA 96003