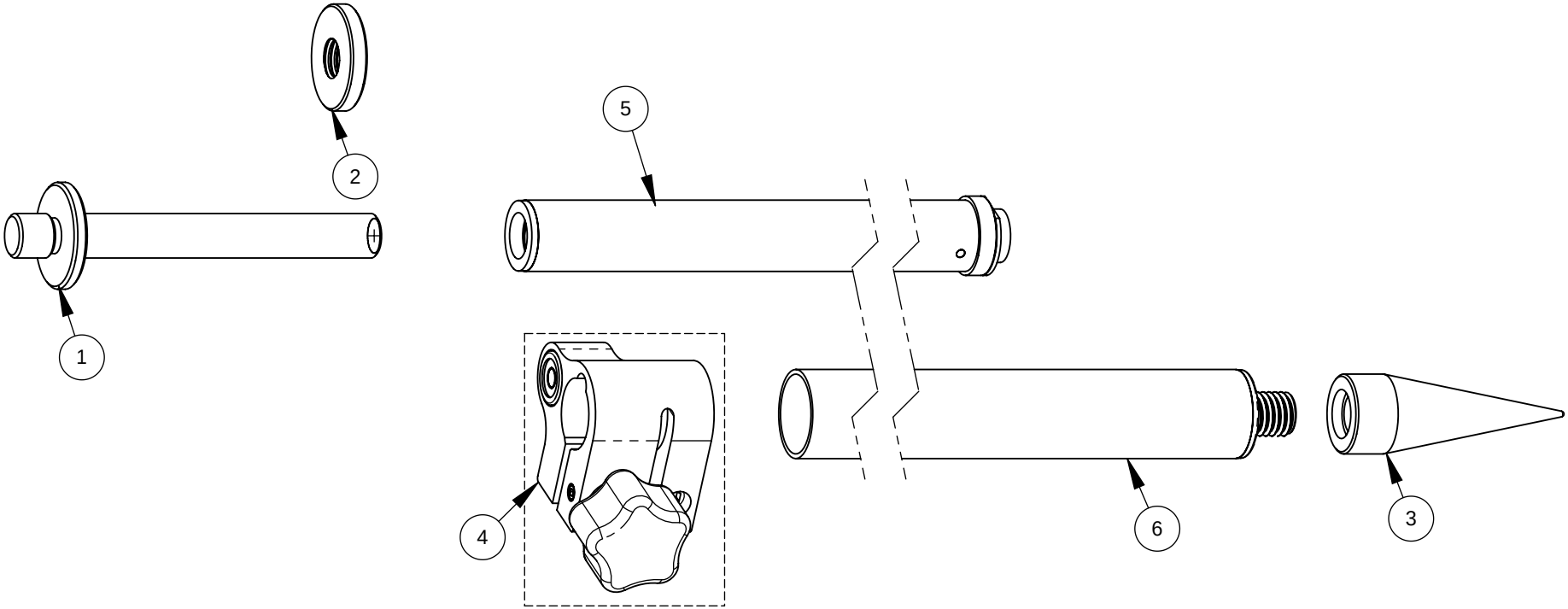

ITEM NO.	PartNo	DESCRIPTION	QTY
1	2090-14-001	ADAPTER, 5/8-11 BRASS	1
2	5101-10-007	JAM NUT, 5/8-11, BRASS	1
3	5190-00	POINT,PRISM POLE	1
4	5500-064	TLV ASSY,1",W/40',SMKNOB	1
5	INNER-KIT-76	KIT,INNER,1",CM/.01FT,2.6M,150MM	1
6	OUTER-KIT-00-XXX	KIT,OUTER,1-1/4",AL,47.875"	1

***NOTE**
Components may be sold separately.
Please see sub-assembly part number drawing for details.

5500-11-XXX	**POLE,PRISM,8.5',CM/.01FT,ADJ,TLV**	**DATE:** 9/14/2004 **REV.** B2 PAGE 1 OF 1	MANUFACTURING CO., INC. 4155 OASIS ROAD, REDDING, CA 96003