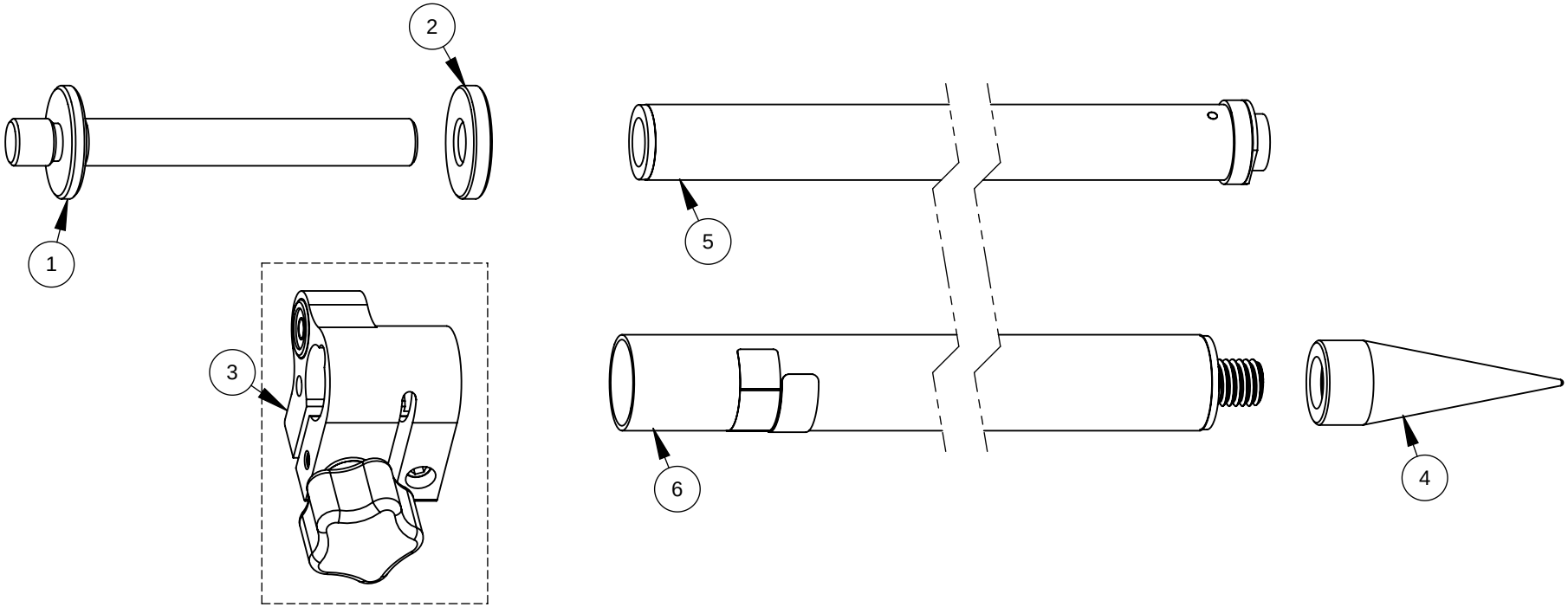


| ITEM NO. | PartNo | DESCRIPTION | QTY |
|---|---|---|---|
| 1 | 2090-14-001 | ADAPTER, 5/8-11 BRASS | 1 |
| 2 | 5101-10-007 | JAM NUT,5/8-11,BRASS | 1 |
| 3 | 5129-065 | TLV ASSY,1",W/40',SMKNOB,NOPIN | 1 |
| 4 | 5190-00 | POINT,PRISM POLE | 1 |
| 5 | INNER-KIT-76 | KIT,INNER,1",CM/.01FT,2.6M,150MM | 1 |
| 6 | OUTER-KIT-00-CF | KIT,OUTER,1-1/4",CF,47.875",BLACK | 1 |

***NOTE**
**Components may be sold separately.**
**Please see sub-assembly part number drawing for details.**

**5129-54** | **POLE,PRISM,8.5',CM/.01,ADJ,TLV,CF**

**DATE:** 1/24/2007
**REV.** B2 | PAGE 1 OF 1

MANUFACTURING CO., INC.
4155 OASIS ROAD, REDDING, CA 96003